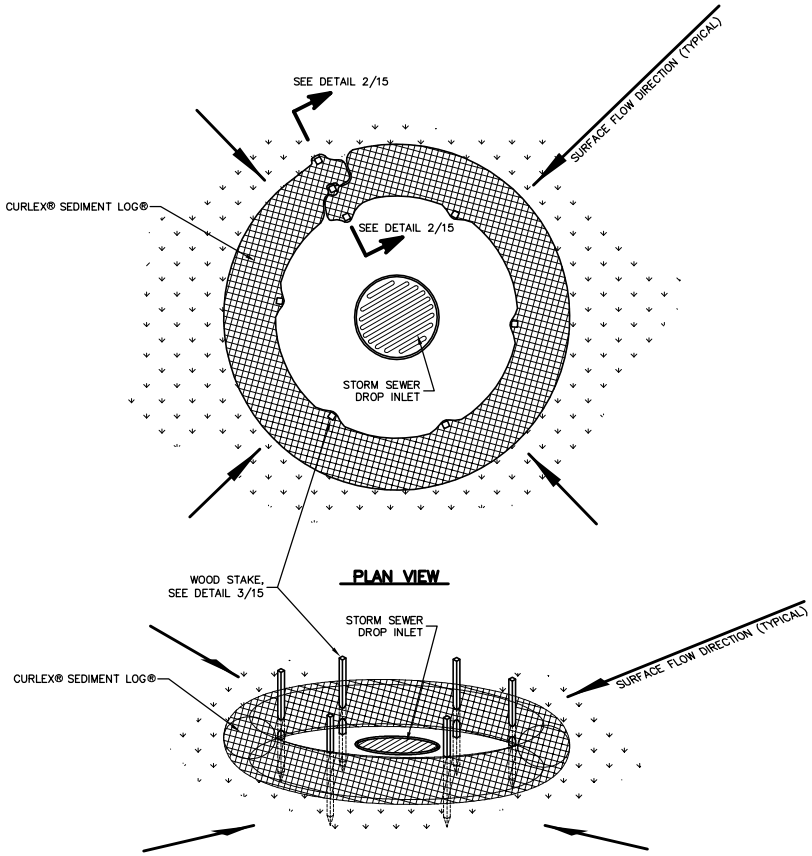

CURLEX® SEDIMENT LOGS® DROP INLET PROTECTION (1/15)
NO SCALE

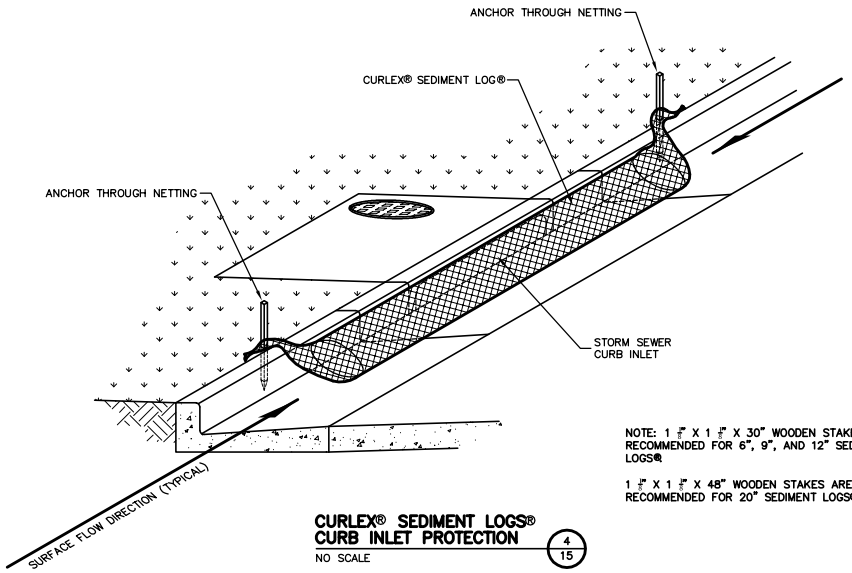

NOTE: 1 $\frac{1}{2}$" X 1 $\frac{1}{2}$" X 30" WOODEN STAKES ARE RECOMMENDED FOR 6", 9", AND 12" SEDIMENT LOGS®.

1 $\frac{1}{2}$" X 1 $\frac{1}{2}$" X 48" WOODEN STAKES ARE RECOMMENDED FOR 20" SEDIMENT LOGS®.

CURLEX® SEDIMENT LOGS® CURB INLET PROTECTION (4/15)
NO SCALE

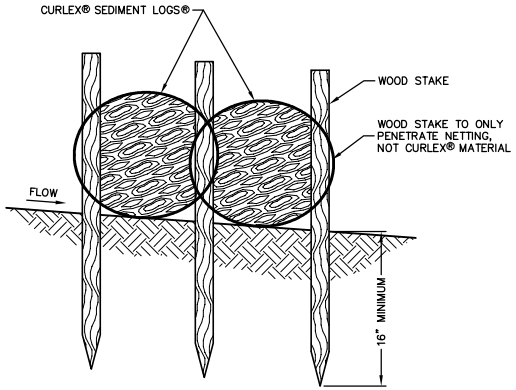

STAKE DETAIL (2/15)
NO SCALE

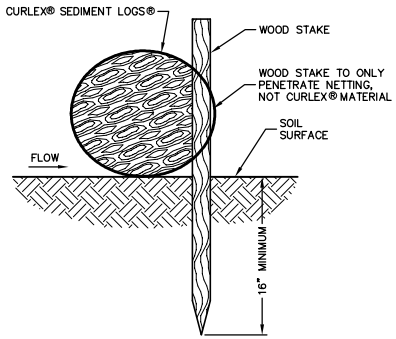

STAKE DETAIL (3/15)
NO SCALE

American Excelsior Company®
Earth Science Division

NO.	BY	DATE	REVISIONS	PROJECT MANAGER	AMERICAN EXCELSIOR COMPANY ARLINGTON, TEXAS	SHEET DESCRIPTION CURLEX® SEDIMENT LOGS® INLET PROTECTION DETAILS	DATE 8/14/03	DRAWN BY	
				CHECKED BY:			SCALE NONE	PROJECT NO.	SHEET NO. 15
				APPROVED BY:					