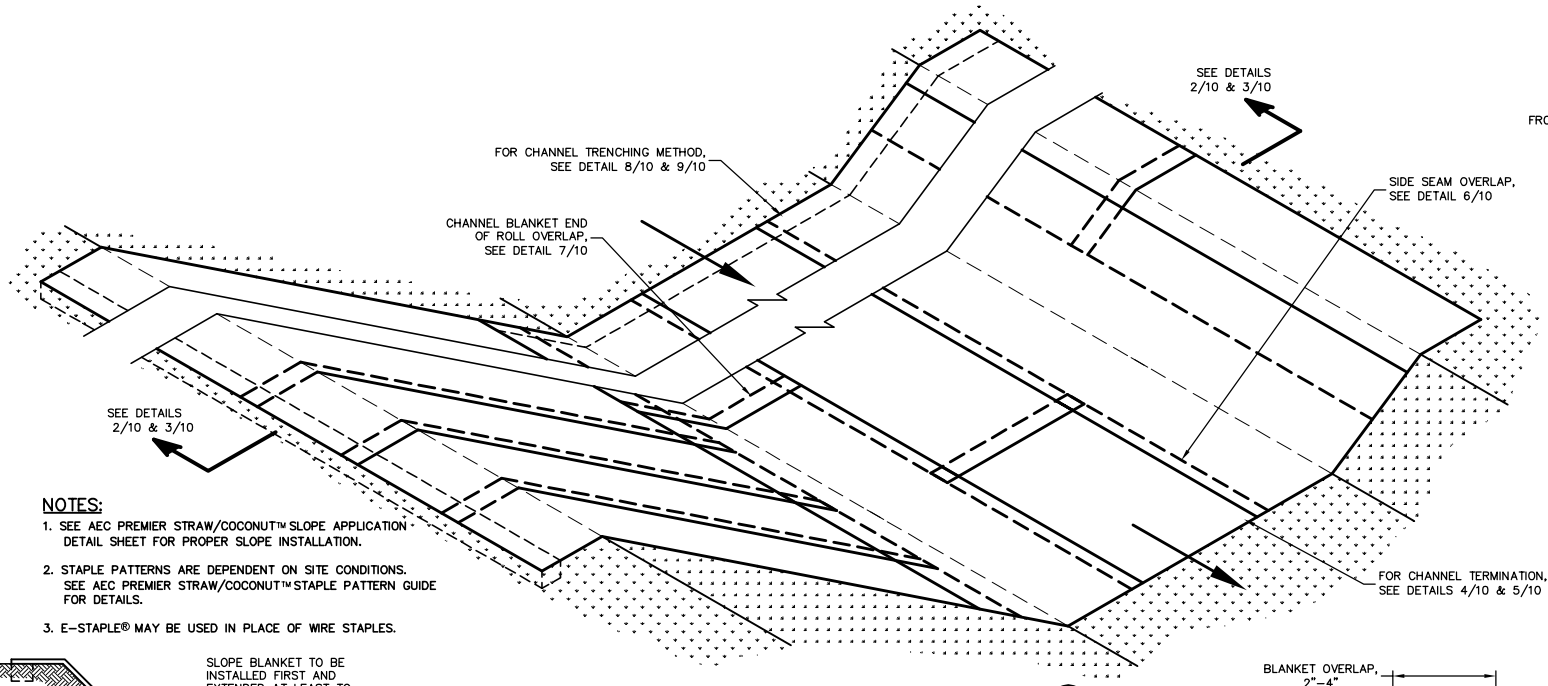

NOTES:

1. SEE AEC PREMIER STRAW/COCONUT™ SLOPE APPLICATION DETAIL SHEET FOR PROPER SLOPE INSTALLATION.
2. STAPLE PATTERNS ARE DEPENDENT ON SITE CONDITIONS. SEE AEC PREMIER STRAW/COCONUT™ STAPLE PATTERN GUIDE FOR DETAILS.
3. E-STAPLE® MAY BE USED IN PLACE OF WIRE STAPLES.

CHANNEL DETAIL 1/10
NO SCALE

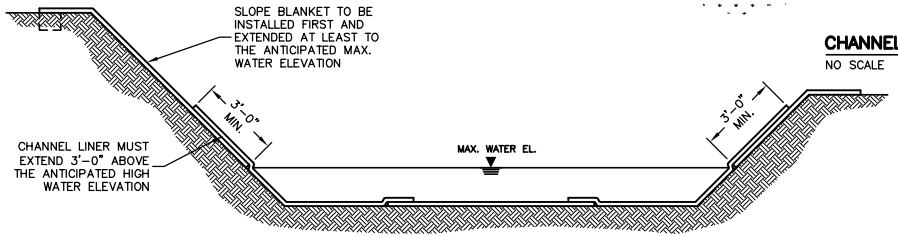

CHANNEL INSTALLATION METHOD "A" 2/10
NO SCALE

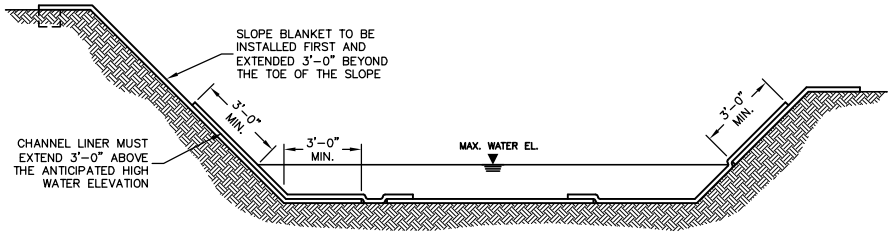

CHANNEL INSTALLATION METHOD "B" 3/10
NO SCALE

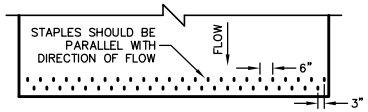

CHANNEL TERMINATION PLAN 4/10
NO SCALE

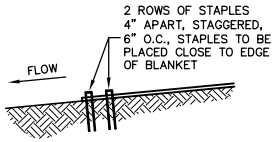

CHANNEL TERMINATION 5/10
NO SCALE

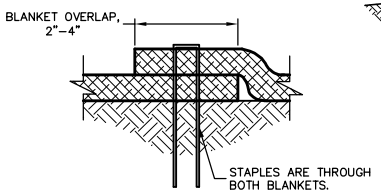

SIDE SEAM OVERLAP STAPLE DETAIL 6/10
NO SCALE

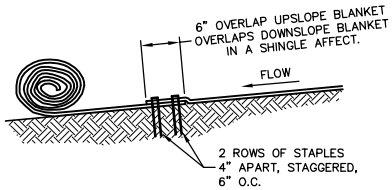

CHANNEL BLANKET END OF ROLL OVERLAP 7/10
NO SCALE

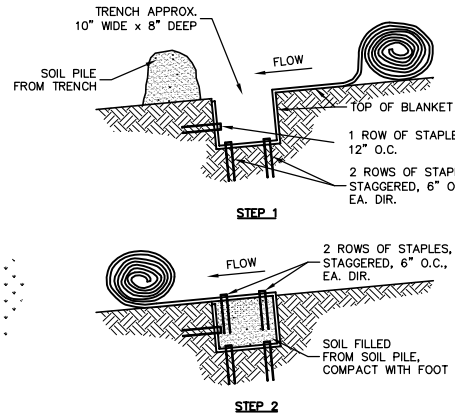

CHANNEL TRENCHING METHOD "A" 8/10
NO SCALE

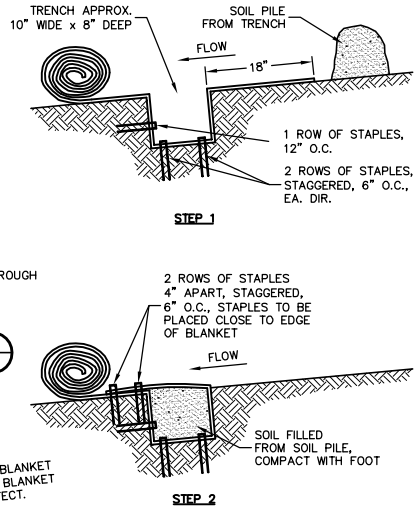

CHANNEL TRENCHING METHOD "B" 9/10
NO SCALE

American Excelsior Company®
Earth Science Division

NO.	BY	DATE	REVISIONS	PROJECT MANAGER / CHECKED BY: / APPROVED BY:	AMERICAN EXCELSIOR COMPANY ARLINGTON, TEXAS	SHEET DESCRIPTION: AEC PREMIER STRAW/COCONUT™ CHANNEL APPLICATION DETAIL	DATE 5/1/03	DRAWN BY: KK	SCALE: NONE	PROJECT NO.	SHEET NO. 10